Voltage:
220-230V/1ph+PE/50 Hz

Atollspeed 300T GC-3070

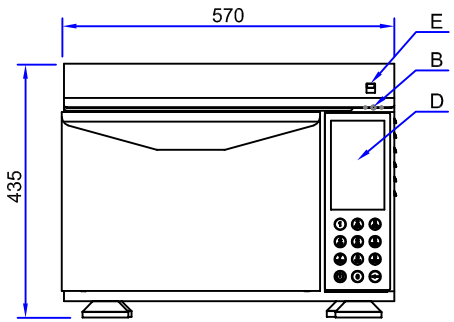

Front view

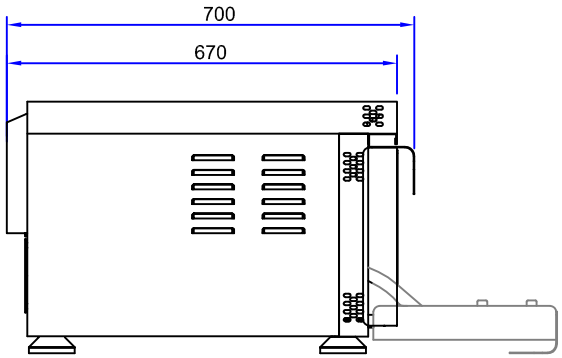

Side view

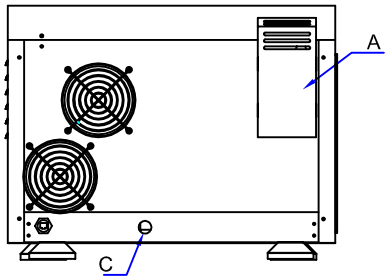

Rear view

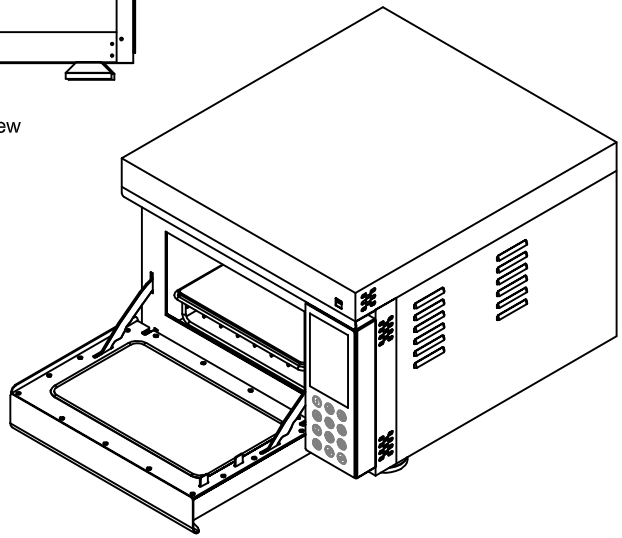

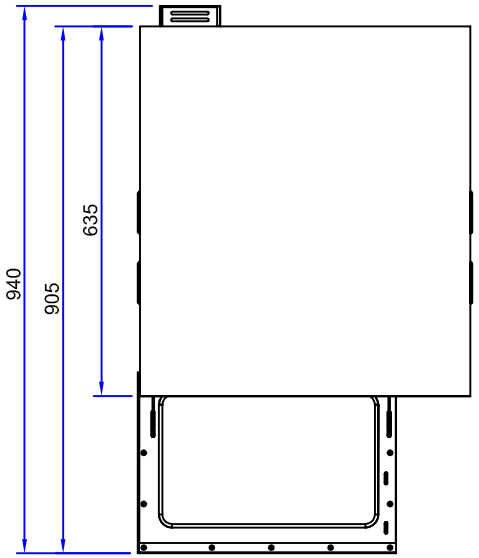

Top view

A Steam discharge cover
B Temperature limiter
C Power cable
D Touch screen display
E USB

Dimension:	570(W)x700(D)x435(H) mm
Door open dimension:	570(W)x940(D)x435(H) mm
Baking chamber dimension:	335(W)x320(D)x170(H) mm
Voltage:	220-230V/1ph+PE/50 Hz
Total power:	3.3 kW
Microwave input power:	1.6 kW
Heating power:	3.3 kW
Current:	15 A
Weight:	69 kg
Microwave frequency:	2450 MHz
Circuit breaker:	D20
Wiring:	2.5 mm^2

Signature: _____
Date: _____

Unassigned Tolerance According to DIN ISO 2768-1							
Dimenson	0.3 To 6	6 To 30	30 To 120	120 To 400	Radius 0.5 To 3	Radius 3 To 6	mm
Tolerance	±0.1	±0.2	±0.3	±0.5	±0.2	±0.5	mm

Kolb Huizhou Ltd.

Tolerance		Customer Title: Atollspeed 300T	Material: SS304
X.±	X.°	Kolb Item Number:	Version: 01
.X±	.X°		
.XX±	.XX°	Kolb Item Name: Atollspeed 300T	

1	Approve		Check		Draft	Min	Unit	mm		Weight	Thickness	Item Number	Page
Quantity	Date		Date		Date	03.09.2013	Scale	1:1				GC-3070	1/1